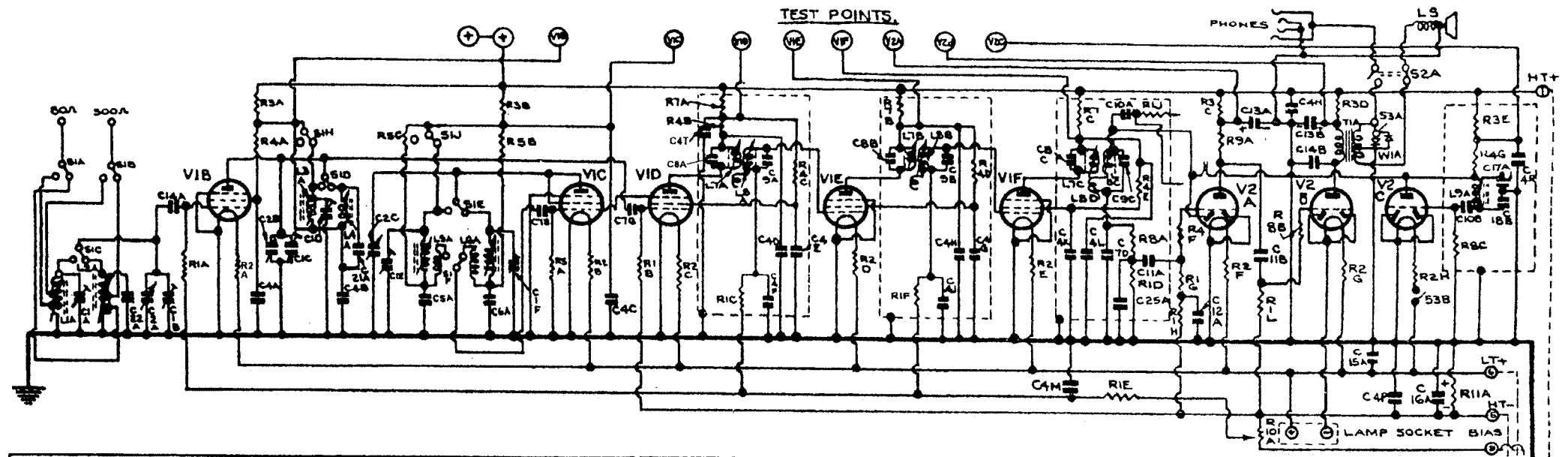

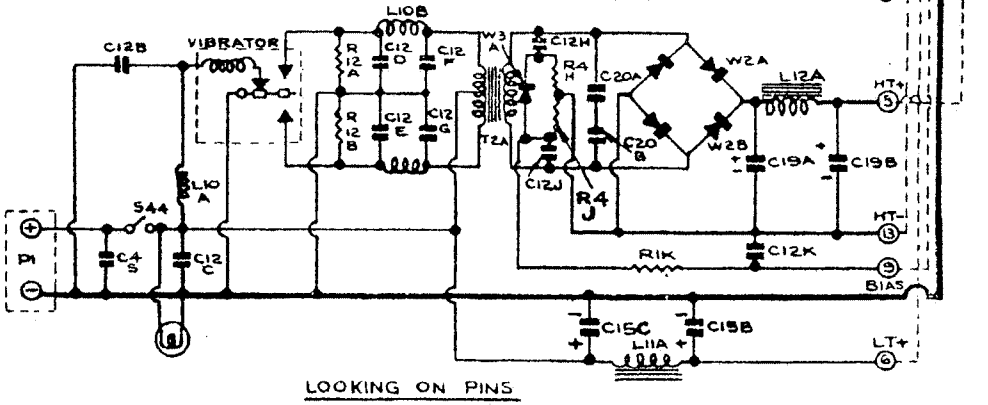

LOOKING ON PINS
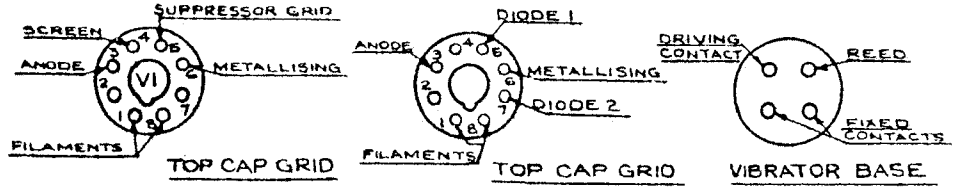
CONDENSERS		RESISTORS		INDUCTANCES	
C1	5/35 μμFD. SEMI-FIXED	R1	1 MEG OHM ± 20%	L1	1·8/3·9 MCS. AERIAL COIL
C2	14/365 μμFD VARIABLE	R2	71 OHMS ± 5% WIRE WOUND 1/2 W	L2	3·9/8·5 MCS. AERIAL COIL
		R3	4,700 OHMS ± 20%	L3	1·8/3·9 MCS. ANODE COIL
C4	·01 μFD ± 25%	R4	·22 MEG OHM ± 20%	L4	3·9/8·5 MCS. ANODE COIL
C5	·0015 μFD ± 10%	R5	22000 OHMS ± 20%	L5	1·8/3·9 MCS. OSCILLATOR COIL
C6	·002 μFD ± 10%			L6	3·9/8·5 MCS. OSCILLATOR COIL
C7	150 μμFD ± 10%	R7	10,000 OHMS ± 20%	L7	I.F. PRIMARY
C8	150 μμFD ± 3%	R8	100,000 OHMS ± 20%	L8	I.F. SECONDARY
C9	160 μμFD ± 3%	R9	47,000 OHMS ± 20%	L9	B.F.O. COIL
C10	220 μμFD ± 10%	R10	1 MEG. OHM VARIABLE LINEAR	L10	VIBRATOR CHOKE
C11	·002 μFD ± 25% TUBULAR	R11	270 OHMS ± 10%	L11	L.T. CHOKE
C12	·1 μFD ± 20% TUBULAR	R12	150 OHMS ± 20%	L12	H.T. CHOKE
C13	2 μFD 350 V POLARISED				
C14	300 μμFD ± 20%				
C15	75 μFD 12 V REV.	SWITCHES		RECTIFIERS.	
C16	25 μFD 12 V POLARISED	S1	1 POLE 2 POSITION ROTARY	W1	TYPE M3
C17	400 μμFD ± 5%	S2	2 POLE 2 POSITION TOGGLE	W2	SELENIUM Nº 13
C18	·0012 μFD ± 20%	S3	1 POLE 2 POSITION TOGGLE	W3	TYPE J25
C19	4 μFD 350 V POLARISED	S4	1 POLE 2 POSITION TOGGLE	PLUGS	
C20	·05 μFD ± 20% TUBULAR			P.1	2 POINT FOR BATTERY
C21	15 μμFD ± 10%	VALVES			
C22	22 μμFD ± 10%	V1	ARP 12	TRANSFORMERS	
C23	100 μμF ± 10%	V2	AR 8	T1	TELEPHONE TRANSFOMER
				T2	POWER TRANSFORMER.